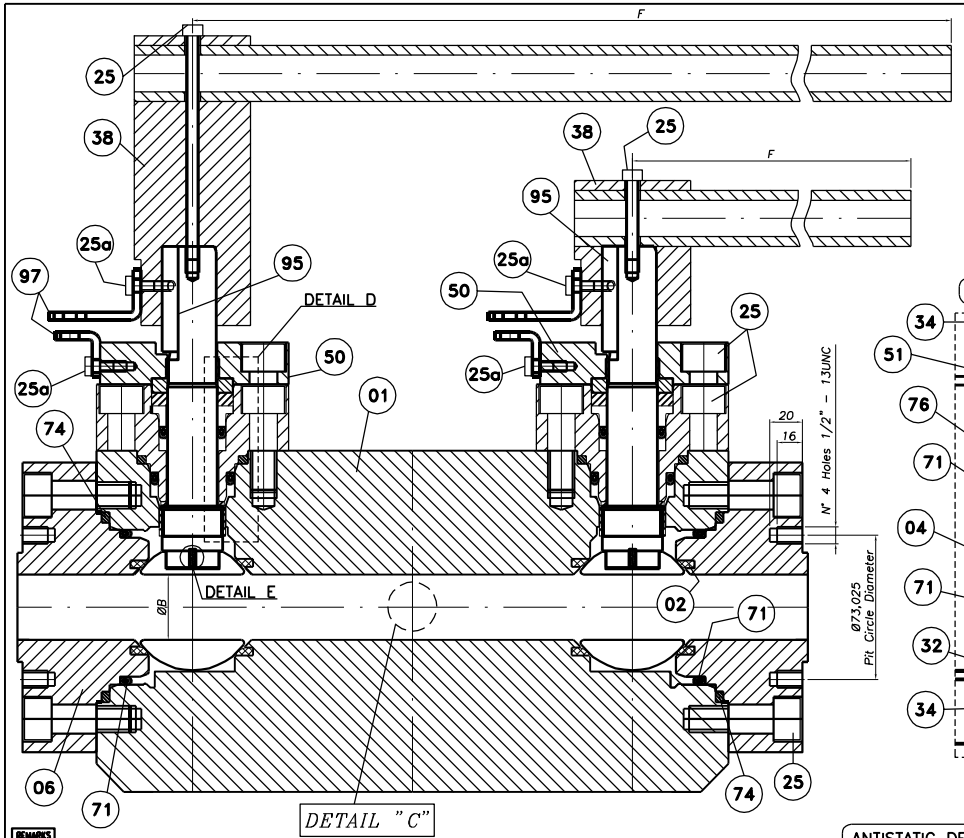

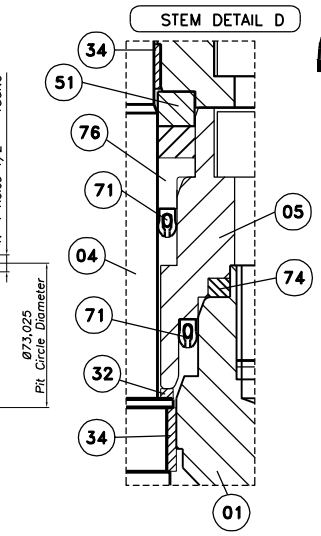

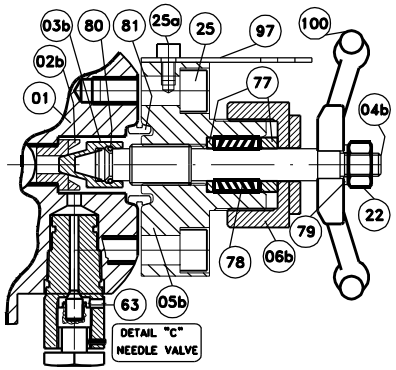

BLEEDER NPT Plug Detail

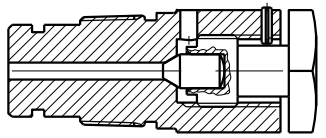

POS.	PART NAME	MATERIAL
01	BODY	A522 TYPE 1
02	SEAT	PEEK
02b	SEAT NEEDLE	A522 TYPE 1
03	BALL	A522 TYPE 1
03b	NEEDLE	A522 TYPE 1
04	STEM	A564 Tp.630_H11500
04b	STEM NEEDLE	A564 Tp.630_H11500
05	COVER	A522 TYPE 1
05b	COVER NEEDLE	A522 TYPE 1
06	FLANGE	A522 TYPE 1
06b	THREADED LOCKING RING	AISI 316
22	NUT	A194 Gr.4 (1)
25	SCREW	A320 L7 (1)
25a	SCREW	A2.70
32	THRUST BEARING	F316/PTFE COATED
34	BEARING	F316/PTFE COATED
38	LEVER	CARBON STEEL+ZINC.PLATED
50	COVER PLATE	A479 Tp.316
51	PACKING GLAND	AISI 316
63	BLEEDER TYPE PLUG	AISI 316
71	LIP SEAL	PTFE/ELGILOY
74	GASKET S.W.T.	F316+GRAPHITE
75	GASKET	GRAPHITE
76	LANTERN RING	AISI 316
77	STEM NEEDLE RING	AISI 316
78	PACK CHEVRON	GRAPHITE
79	RING	INOX
80	CIRCLIP	INCONEL 750
81	SEAL RING GROOVES IX	F316
82	SPRING	INCONEL X750
95	KEY	AISI 4140
97	LOCKING ARRANGMENT	CARBON STEEL+ZINC.PLATED
100	HANDWHEEL NEEDLE	CARBON STEEL+ZINC.PLATED

NOTE:
- (1) Zinc Nickel coating according I-ET-3010.92-1400-200-KFB-001_A, Appendix 10

ANTISTATIC DEVICE E

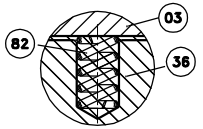

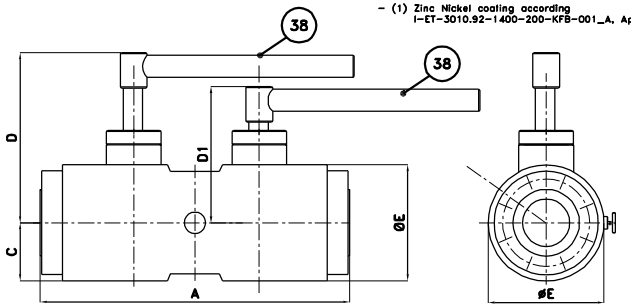

REMARKS
- Dimension in mm
- Face to face according STD.MFR.
- Flange ends according to ANSI B16.5,serrated FINISHING 125µIN - 250µIN
- Antistatic device according to BS 5351
- Fire safe according to ISO 10497
- Valve provided with locking device
- Material to NACE MR01-75 (2002 issue)
- Marking accorging to MSS SP-25
- Test according ISO 14313 (API 6D)
- Test complement according ISO 14313 (API 6D): low-pressure seat testing between 0.58ar and 1.08ar using air or nitrogenos the test medium;low pressure gas seat testing of 5.58ar ± 0.78ar using air or nitrogenos as the test medium; antistatic testing:torque/thrust functional testing

* = Special Flange P-66 Petrobras std.

ITEM	SIZE:	CLASS	Q.TY	ENDS	A	ØB	C	D	D1	ØE	F	Valve Tag	Data Sheet	Appr.Weight (Kg)
14	1"	API 10000	22	CF*	270	20,7	72,5	253	188	145	500	VET-1453N-1	I-RM-3010.92-1419-224-TB7-003	40

Fluitek Orsenigo Valves

	ORIGINAL	REV. A	REV. B	REV. C	REV. D	REV. E	REV. F	REV. G	REV. H	REV. J	REV. K
DATE	01/15/2014	02/12/2014									
DESIGN	FKW	FKW									
EXECUTION	SF	AP									
CHECK	AB	AB									
APPROVAL	FC	FC									

CONSÓRCIO TOMÉ FERROSTAAL
CONTRACT: 040/2013
TECH. RESP./CREA No.: FRANCESCO CAVALLARO
Fluitek Orsenigo Valves S.p.a
FILE No.: AUTOCAD /V. 12 / I-DE-3010.97-1419-224-FKW-101_A.dwg
TUPI BV
Drawing No.: I-DE-3010.97-1419-224-FKW-101
CLIENT: E & P
SHEET 08 of 08
JOB: PRESALT FPSOs
AREA: PETROBRAS 71 (P-71)
ENG-E&P IEUEP-II/IEREPL
TITLE: VALVE ASSEMBLY - DOUBLE BLOCK AND BLEEDE VALVE FLOATING - SIDE ENTRY FULL BORE
CORPORATE
IEREPL

FORM OWNED TO PETROBRAS N-381 REV. L

INFORMATION IN THIS DOCUMENT IS PROPERTY OF PETROBRAS, BEING PROHIBITED OUTSIDE OF THEIR PURPOSE